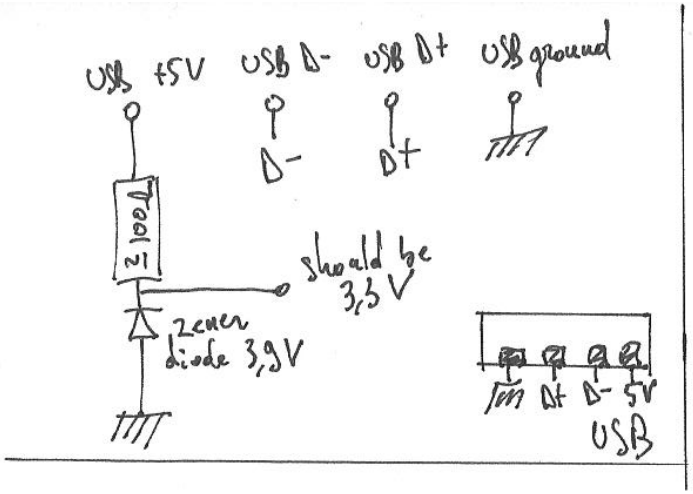
USB +5V
USB D-
USB D+
USB ground
D-
D+
100 Ω
should be 3,3 V
zener diode 3,9V
D+ D- 5V
USB

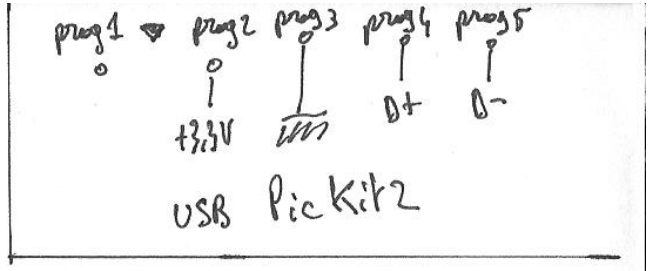
prog1
prog2
prog3
prog4
prog5
+3,3V
D+
D-
USB PicKit2

+3,3V

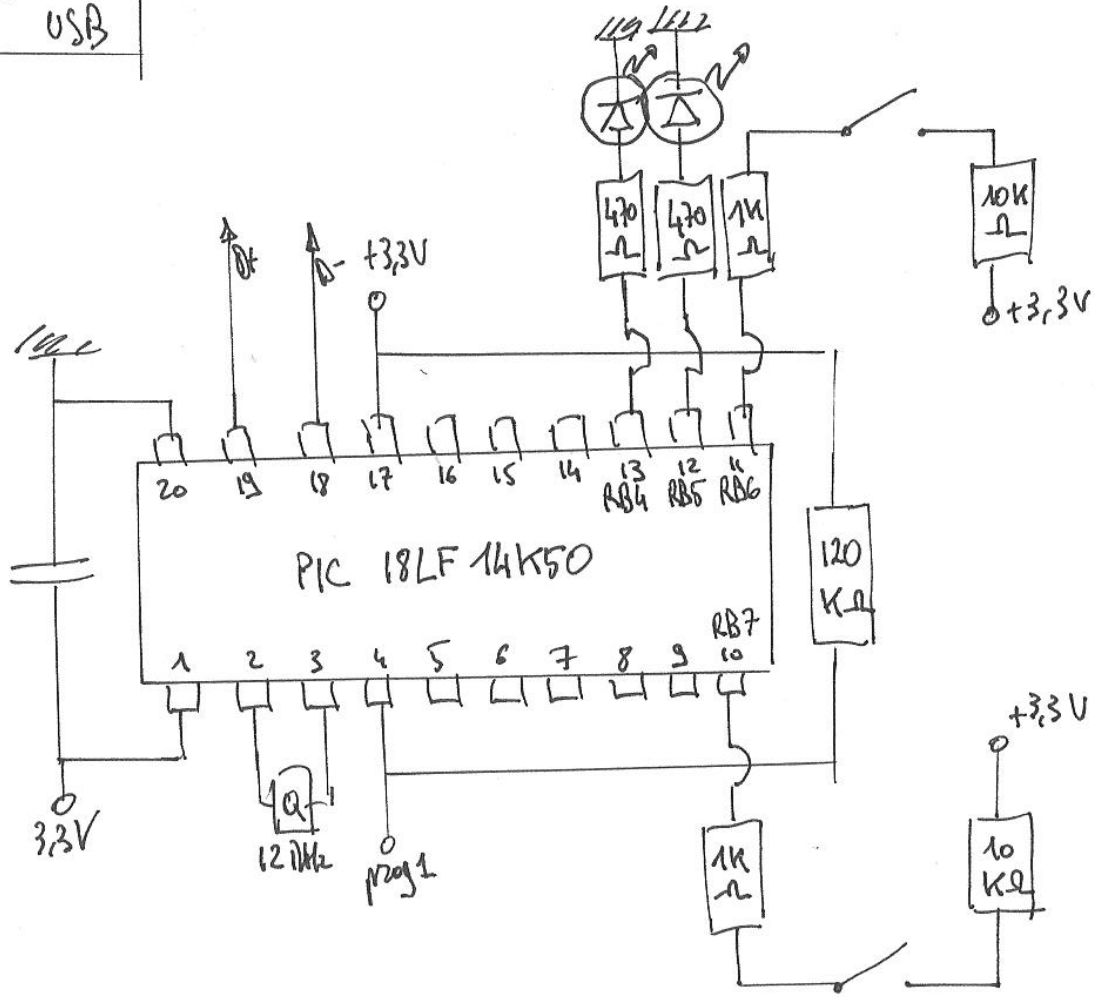
D+
D- +3,3V
470 Ω
470 Ω
1K Ω
10K Ω
+3,3V
20 19 18 17 16 15 14 13 12 11
RB4 RB5 RB6
PIC 18LF 14K50
120 KΩ
RB7
1 2 3 4 5 6 7 8 9 10
+3,3V
3,3V
12 MHz
prog1
1K Ω
10 KΩ